Oberon Tarana Heritage Railway

Engineering Standard

Structures

OTCS 300

STRUCTURES SYSTEM

Version 1.0

Issued August, 2018

Approved by:

Document control

Revision	Date of Approval	Summary of change
1.0	August, 2018	First Issue. Includes content from the following former RIC standard: TS 4151.and CRN CS 300 Ver 1.0

Summary of changes from previous version

Section	Summary of change

Contents

1 Purpose, scope and application 4
2 References 4
2.1 Australian and International Standards 4
2.2 OTHR documents 4
2.3 Other references 4
3 Engineering authority for bridges and structures 4
4 Bridge and structure categories 4
5 Bridge and structure design 6
5.1 General 6
5.2 Design life 6
5.3 Transit space requirements 6
5.4 Safety 7
5.5 Heritage assets 7
5.6 Maintenance and maintainability 7
5.7 Construction 8
6 Description of bridges and structures 8
7 Bridge spans 8
7.1 Length 8
7.2 Types 8
8 Numbering of bridge members 8
8.1 Underbridges 9
8.2 Overbridges and footbridges 9
9 Location of bridges and structures 9
Appendix 1 Definitions 11
Appendix 2 Typical bridge spans and members 15

1 Purpose, scope and application

This Standard sets out the high-level engineering standards for the design, construction and maintenance of bridges and structures together with the conventions adopted for describing types of bridges and structures and their individual members.

2 References

2.1 Australian and International Standards

AS 4292 - “Railway Safety Management”

AS 5100 (2004) - “Bridge design”

2.2 CRN documents

OTCS 100 – Civil Technical Maintenance Plan

OTCS 215 – Transit Space

OTCS 302 - Defect limits

OTCS 310 - Underbridges

OTCS 320 - Overbridges & footbridges

OTCS 330 - Miscellaneous structures

2.3 Other references

CRN CP 301 - Structures Construction

CRN CM 301 to CRN CM 311 – Structures Engineering Manuals

NSW Rail Safety Act 2008 & Rail Safety (General) Regulations 2008

NSW Occupational Health & Safety Act 2000

NSW Heritage Act 1977 & Heritage Regulation 2005

3 Engineering authority for bridges and structures

The Engineering Manager exercises Engineering Authority for all bridge and structures work.

The Engineering Manager may delegate engineering authority for specified tasks

4 Bridge and structure categories

Bridges fall into three (3) general categories:

Underbridges: These are bridges supporting the track and passing over waterways, roadways, pathways, flood plains, etc. Underbridges include viaduct, subway and culvert structures.

The term „**viaduct**" is used to refer to underbridges in excess of 100 metres in length.

The term „**subway**" is used to refer to an underbridge that passes over a pedestrian pathway.

The term „**culvert**" is used to refer to minor ballast-top openings comprising metal pipes, concrete pipes, concrete boxes, concrete arches, brick and masonry arches.

The term „**minor opening**" is also commonly used to refer to an underbridge less than 10 metres in length.

Overbridges: These are bridges carrying road vehicles or livestock over the track, and may include provision for pedestrians.

Footbridges: These are bridges over the track carrying pedestrian traffic only, and may be freestanding or combined with an overhead booking office and/or retail outlets.

In addition to bridges as defined above, there are specific categories of other *structures* crossing over, under or adjacent to the track:

Tunnels: These are structures constructed through high terrain that enables the rail track to continue at an acceptable grade. It may be constructed by boring or by cut and cover. It may be fully lined or unlined (depending on the stability of the natural ground) and may be constructed with drainage systems, ventilation shafts and safety refuges.

Overbridges built to accommodate wide or skewed roadways are not defined as tunnels.

Retaining Walls: Retaining walls are constructed to protect the rail track from subsidence or land slips and are typically provided in cuttings or on narrow embankments. They are also constructed in areas where natural ground batters and the necessary cess width are not possible owing to the limited width of the railway easement. They are typically constructed in timber, masonry, concrete, gabions, steel sheeting, reinforced earth or rails and sleepers.

Station Platforms: These are line-side structures built to provide public access to passenger trains.

Signal Gantries: Portal structures built to support signals over the tracks.

Buffer Stops: These are structures provided at the end of rail lines or sidings to prevent rolling stock from running off the end of the track and/or colliding with adjacent structures.

Service Crossings: These are structures carrying commercial product or utilities over or under the tracks and across the railway corridor.

Overhead Loading Structures: These are structures constructed over a rail track that permit the loading of bulk products into open-top freight wagons.

Unloading Bins: These are structures constructed beneath a rail track that permit the discharge of bulk products from the bottom of freight wagons.

Rockfall Shelters: Rockfall shelters are structures installed over and beside a rail track to prevent loose material from adjacent cuttings falling on to the rail line.

Lighting and Communication Towers: These are structures installed beside a rail line for the purpose of supporting overhead lighting and aerial communication lines.

Cranes, Storage Dams, Turntables, Water Columns, Water Tanks and Weighbridges: These structures are generally decommissioned and located in many cases on disused lines.

Cattle Grids: These are specially fabricated steel grids placed over the track at locations where boundary fences are intersected, to prevent livestock straying onto other properties.

5 Bridge and structure design

5.1 General

All bridges and structures shall be designed, constructed and maintained to meet the following general criteria:

- Provide a safe and reliable corridor for the passage of all rail, road and pedestrian traffic;
- Be capable of supporting the current / known future operation of rail traffic at the designated loads and speeds;
- Conform with transit space requirements
- Provide impact and derailment protection where applicable
- Meet the specified Availability, Reliability and Maintainability requirements.

The design of each bridge and structure shall be integrated taking into account all associated requirements such as service routes, signalling infrastructure, drainage, bonding and architectural treatments. Where appropriate, aesthetics shall be taken into account including proportions, details and finishes.

Approved construction materials for main structural elements are steel and concrete. Masonry and timber is approved for existing structures. With the exception of bridge transoms, timber materials shall not be used as structural elements in the design of new bridges and structures.

Fibre composite and engineered timber products may be used subject to approval.

All bridges and structures shall be managed in accordance with the requirements of the following OTHR standards

- Underbridges OTCS 310
- Overbridges & footbridges OTCS 320
- Miscellaneous structures OTCS 330

5.2 Design life

All bridges and structures shall be generally designed for a design life of 100 years, in accordance with AS 5100 “Bridge Design”. Major assets in service such as steel truss bridges, long viaducts and tunnels shall, however, be maintained and preserved for an indefinite service life.

Bridges and structures configuration shall be selected to minimise the “Whole of Life” cost of the asset.

5.3 Transit space requirements

The design of the bridges and structures shall comply with the Transit Space requirements specified in Standard OTCS 215.

The area extending one metre below design rail level of Normal Structure Gauge 1994 as detailed in OTCS 215 shall be kept clear of structures and structure footings.

When modifying or replacing line-side or overhead structures, clearances, track centres and shoulder widths should be increased to the current standards to the maximum extent possible given practical restraints at the site. Where current standards cannot be achieved the approval of the Engineering Manager shall be obtained.

5.4 Safety

All works shall be designed to comply with the requirements of relevant safety, statutory and regulatory requirements and Australian Standards, in particular the NSW Rail Safety Act 2008 and Rail Safety (General) Regulations 2008, NSW Occupational Health & Safety Act and AS 4292 “Railway Safety Management”.

Designs for structures shall provide safe access for inspection and maintenance. This may include access steps, ladders, cages, walkways and fixing points.

Trackside structures shall not be painted in safeworking colours of red, orange or green.

5.5 Heritage assets

Heritage considerations and classifications shall be observed in all designs. This may have particular application in circumstances where:

- an existing structure is being refurbished or modified
- a new structure is being proposed in the vicinity of existing heritage items
- a redundant structure is to be demolished.

A heritage register shall be established and maintained for bridges and structures under OTHR control, in accordance with the provisions of the NSW Heritage Act and Heritage Regulation.

The Heritage Branch of NSW Department of Planning maintains a State Heritage Inventory. The State Heritage Inventory is available on their website at www.heritage.nsw.gov.au.

These registers shall be referenced before planning any changes to structures assets to ensure changes comply with the requirements of the NSW Heritage Act.

5.6 Maintenance and maintainability

The existing bridges and structures assets are maintained in accordance with the Civil TMP (OTCS 100). Guidelines for installation, inspection and maintenance procedures are documented in Engineering Manuals CRN CM 301 to C R N CM 311.

When undertaking new bridge and structure designs, deterioration limits (to be referred to as Defect Limits) shall be set for relevant components that have failure modes with significant impact. A Mandatory Response shall also be set for each Defect Limit found, ranging from recording for future information and action to immediate closure of the track (or road). Limits and responses developed in the design shall be formulated to match the response regime documented in Engineering Standard OTCS 302.

Technical Maintenance Plans (TMP) shall be prepared and implemented for all bridge and structure assets, specifying which items are to be maintained, what maintenance is to be carried out and when maintenance is required. Preventive Maintenance tasks already documented in OTCS 100. The TMP shall be documented in a format that can be readily incorporated into OTCS 100.

New designs shall consider and incorporate ease and cost of future maintenance. This includes consideration of site access, distance and time for staff to attend, staff knowledge and skills. Standard components should be used wherever possible to minimise costs, repair times and the risk of staff error.

When considering access to site for maintenance, designers shall consider the location and orientation of components that require regular routine maintenance with respect to the defined danger zone within the rail corridor. To maximise the safety of personnel whilst maintaining fixed equipment within the rail corridor, it is important that the manufacture and installation design of such equipment, wherever practicable, be such that personnel are able to work outside the danger zone and are not required to work with their backs to the danger zone.

5.7 Construction

Standard construction specifications shall be used for the manufacture, fabrication, erection and installation of bridge and structures components, and the construction of associated civil works.

The owner has a suite of technical specifications for construction of bridges and structures. The specifications are detailed in Engineering Specification CRN CP 301 “Structures Construction” and shall be incorporated in the design and construction documentation of structures. The specifications generally adopt the RTA QA Specifications as posted on the RTA web site. The specifications include specific TfNSW requirements where necessary.

6 Description of bridges and structures

Terms used to describe individual members of bridges and structures are listed in Appendix 1. Sketches of typical bridge spans and members are shown in Appendix 2.

7 Bridge spans

7.1 Length

The length of bridge spans is measured and described as follows:

- Timber bridges: distance between centres of headstocks.
- Steel bridges: distance between centres of bearings.
- Concrete bridges: distance between centres of bearings.
- Brick and Stone bridges: distance between faces of piers.

For bridges with an integral deck, walls, and invert (e.g. box culverts, arch culverts, box drains and pipes), the span length is measured between faces of walls.

Skew spans are measured generally parallel to the supported track or road.

7.2 Types

There are three (3) types of bridge span:

- **Deck** - Has track on top with no parts of bridge above rail height.
- **Through** - Any type of bridge that has sides above the level of the track with no parts on top joining the sides.
- **Truss** - A bridge made up of a number of parts and forms a box type shape and trains pass through the centre.

8 Numbering of bridge members

Numbering of bridge members follows the same pattern for underbridges, overbridges, and footbridges.

8.1 Underbridges

For underbridges, the Sydney end abutment is the datum for numbering, being the No. 1 Abutment.

The numbering system for bridge components starts at the Sydney end of the bridge.

For members running across ways, e.g. abutments, spans, piers, cross girders, sway braces and transoms, the numbers start at number 1 at the Sydney end abutment and continue sequentially towards the country end of the bridge

Members are numbered as follows:

- Spans: No. 1 is the first span from the Sydney end abutment; and then numbered away from Sydney
- Girders, Stringers, Corbels: From the Down side of each span. For compound girders, add “top”, “intermediate”, or “bottom”.
- Other Longitudinal Members: as for Girders.
- Transverse Decking/ Cross Girders: from the Sydney end of each span.
- Abutments: No. 1 closer to Sydney, No. 2 other end of bridge.
- Piers: No. 1 closest to No. 1 Abutment, others in sequence.
- Trestles and Sills: As for Piers.
- Piles: From the Down side of each Abutment/Trestle/Pier.
- Wing Piles: From the track end of each Wing.
- Abutment Wings: No. 1 (Down) and No. 2 (Up) for No. 1 Abutment. No. 3 (Down) and No. 4 (Up) for No. 2 Abutment.
- Intermediate Supports: Numbered as for the span they support.
- Walings/Bracing: No. 1 on Sydney side of support.
- Bearings: No.1 on Down side of support

Refer to Appendix 2 Figure 1, Figure 2 and Figure 3 for examples of bridge numbering.

8.2 Overbridges and footbridges

For overbridges and footbridges, the Down side Abutment is the datum for numbering, i.e. the No. 1 Abutment.

The numbering system for bridge components starts at the Down side abutment. Bridge members then are numbered as for an underbridge i.e. from No. 1 abutment to No. 2 abutment, and from left to right when standing at No. 1 abutment facing the bridge.

9 Location of bridges and structures

All bridges and structures are to have a kilometrage (correct to 3 decimal places) stencilled in 75mm high black figures on a white background, or engraved on a plaque.

The kilometrage value is generally the value at the face of the structure on the Sydney end. For bridges and culverts, the kilometrage value is as follows:

- **Underbridges:** the km value at the face of the Sydney end abutment under the centreline of the furthest Down track.
- **Culverts:** the km value at the centreline of the culvert or the Sydney side centreline of a group of culverts.

- **Overbridges** and **Footbridges**: the km value where the Sydney side of the bridge crosses the track.

The stencilled kilometrage is to be located as shown:

- **Underbridges:** on the Up side of the No. 1 abutment and on the Down side of the No. 2 abutment.

  Underbridges less than 10 metres long are to be stencilled on the No. 1 abutment only. Bridges without defined abutments, e.g. single corrugated steel pipes, shall be stencilled on the face of the Down side headwall, or if this is not possible, star picket or old rail markers driven in adjacent to the Down side headwall, and the kilometrage printed on one face over a white background..
- **Overbridges** and **Footbridges:** on the abutment or pier adjacent to the furthest Down track and at the Sydney end.
- **Tunnels:** on the Down side of the No. 1 portal, and on the Up side of the No. 2 portal.
- **Platforms:** on the face of the coping at each end of No. 1 platform.
- **Signal Structures:** in accordance with conventions implemented by signalling discipline..
- **Other Structures:** on the Down side of the track and at the Sydney end.

Appendix 1 Definitions

Term	Description
A	
Abutment	The support at each end of a bridge.
Abutment sheeting	Timber planks used to retain the filling behind an abutment.
Approach slab	Slab (usually reinforced concrete) laid above the formation behind bridge abutments and designed to provide a transition zone for track stiffness onto the bridge.
B	
Ballast log	Timber, steel or concrete member sitting on top of the abutment wall to hold back track ballast.
Ballast top	Underbridge with continuous deck supporting metal ballast.
Ballast wall	Member laid longitudinally at the outer edge of a ballast top span to prevent ballast spilling over the side.
Barrier	The fence or walls along the sides of overbridges and footbridges, installed to protect road vehicles, cyclists and pedestrians from falling over the edge of the bridge.
Bearing	Seating area of a load-carrying member; may be a separate fabricated member attached to the girder ends.
Body bolt	Vertical bolt in timber girders and corbels causing pairs of members to deflect together.
Bracing	Horizontal or diagonal member attached to main members to stiffen those members, or to minimise sidesway.
Bridge	A structure spanning a river, road, railway, or the like, and carrying vehicles or persons.
Butt transom	Intermediate transom linking the ends of girders from adjacent spans.
Broad flange beam	A steel girder designed in the 1920"s with thicker and wider flanges and reduced height of web for use in locations where greater vertical clearance was required.
Buffer stop	Structure provided at the end of a rail line or siding to prevent rolling stock from running off the end of the track and/or colliding with an adjacent structure.
C	
Capping	Impermeable layer of fill located immediately above the main formation and designed to shed water to the sides of the track.
Catchment	Area of land from which water flows into an underbridge.
Compound girder	Timber girder made from two or more sections bolted firmly together on top of each other.
Coping	The longitudinal edge of a station platform.
Corbel	Short longitudinal member seated on a headstock providing a bearing for adjacent girders.
Crack	Open fissure on the surface of a member, but not necessarily right through the member.
Culvert	Arch, box-shaped or piped underbridge having integral walls, roof and floor.
D	
Debris	Rubbish or other loose material lying near an underbridge and which impedes smooth water flow through the bridge opening.
Decay	Deterioration on or in a timber member causing loss of strength.
Deck	Part of bridge superstructure directly carrying the load.
Deflection	Downwards displacement or sag of a girder when loaded by vehicles or persons.
Deflection wall	Structural wall installed to protect the supports of a structure adjacent to the track from collapse caused by a derailed train.

Term	Description
Deflectometer	Instrument for measuring deflection in girders - also referred to as “mousetrap”.
Driving mark	Mark cut into timber pile indicating in roman numerals the distance to the toe of the pile
E	
Engineered backfill	Compacted select earth fill behind abutments, reinforced with horizontal layers of geogrid or similar and used to stiffen the bridge approach”
F	
Flood level	Mark stencilled on No.1 Abutment of underbridges indicating height and date of maximum previous flood.
Footbridge	Bridge over the track carrying pedestrian traffic only. May be freestanding or combined with an overhead booking office.
Footway	Pedestrian access attached to, or included in, an overbridge.
Formation	Ground immediately beneath the capping and track.
G	
Girder	Main horizontal load-bearing member of a structure.
Guard rail	Rail placed in pairs and fixed to transoms or sleepers between the running rails, to guide the wheels of a derailed train.
H	
Handhold device	A system of handrails provided along a wall structure to provide support for personnel.
Headstock	Horizontal member(s) attached at or near the top of a trestle or pier, on which the superstructure bears.
I	
Intermediate transom	timber transverse member set between top and bottom girders in a ballast top span.
Invert	Earth or concrete floor of an underbridge.
J	
Jack arch	Form of bridge decking in which small concrete or masonry arches infill run between main longitudinal steel girders.
K, L	
M	
Minor opening	Underbridge less than 10 metres in length.
N	
O	
Obvert	Underside of bridge superstructure.
Overbridge	Bridge carrying road vehicles or livestock over a track.
P	
Packing	Piece of timber, steel, or other hard material, placed or driven between members to adjust their relative position.
Parapet	A type of barrier comprising a solid wall or post and rail fence along the sides of overbridges and footbridges, installed to protect road vehicles, cyclists and pedestrians from falling over the edge of the bridge.
Pier	Intermediate support of bridge spans between abutments, built of solid construction and usually in concrete or masonry.

Term	Description
Pile	A vertical or inclined member driven or cast in the ground to support a trestle, pier, sill, or abutment. Includes: Batter pile: set at an angle to the vertical to resist sidesway; Planted pile: set in excavated hole then backfilled and compacted; Plumb pile: vertical pile; Potted pile: set in concrete below ground level; Pumping pile: a pile that is moving vertically in the ground under load; Spliced pile: two or more pile sections joined end-to-end by plates; Stump pile: pile section left in the ground after top removed.
Pile cap	Concrete member located at the top of a nest of piles to link their supporting action together.
Pipe	Hollow longitudinal void near the centre of a timber member where the heartwood is usually situated.
Protection screen	Screen installed on overbridges and footbridges to prevent accessibility to a safety screen and to restrict objects from falling or being thrown onto the track below.
Q	
R	
Refuge	A „safe area" provided along a bridge, retaining wall or in a tunnel.
Rockfall shelter	A structure installed over and beside a rail track to prevent loose material from adjacent cuttings falling on to the rail line.
Rot	Internal decay of a timber member caused by fungal attack.
Runner	Longitudinal member bolted to girders and transoms to hold transoms to correct spacing.
S	
Safe area	A place where people and equipment will not be hit by a passing train.
Safety walkway	An area along an underbridge where personnel can walk without falling through to the ground.
Screwing up	Maintenance process of tightening up body and other bolts to improve the load capacity of a timber bridge.
Service crossing	Structure carrying commercial product or utilities over or under a track and across the railway corridor.
Sill	Concrete or masonry footing supporting a trestle.
Soffit	The underside of a bridge superstructure.
Span	(a) deck of a bridge between adjacent substructure supports
	(b) the distance between girder supports.
Split	Fissure in a timber member running parallel to the grain, from one face right through to the opposite face.
Station platform	Line-side structure built to provide public access to passenger trains.
Stiffener	Vertical steel plate used to stabilise and strengthen the web of girders.
Substructure	The supports for a bridge deck including trestles, piers, abutments and foundations.
Subway	Underbridge passing over a pedestrian pathway.
Superstructure	The deck or "top part" of a bridge spanning between supports.
T	
Teredo	Marine borer which destroys timber in tidal areas.
Termite	Insect (incorrectly called white ants) which attacks timber by eating the cells, causing

Term	Description
	strength loss.
Through span	Span type where the main girders rise above track level.
Tie bar and tie rod	long bars used to hold adjoining concrete girders or culvert units together across the track
Tie plate	steel plate used to hold adjoining concrete culvert units together across the track
Tip end sheeting	Sheeting behind extended timber girder ends of abutments.
Transom	Structural member (usually timber) laid across girders for attachment of rails on transom top spans.
Transom packer	small packers, usually steel, located between the underside of a transom and top of a girder, used to adjust the height and superelevation of the track and to remove loading from the girder flanges
Transom top	Underbridge where the track is directly fixed to the superstructure and metal ballast is not provided.
Trestle	Intermediate support for bridge spans between abutments, usually constructed as a timber or steel frame.
Troughing	Pipe in timber member starting at the top face.
Truss	Girder made from two horizontal members (top and bottom chords), joined by vertical and diagonal members.
U	
Underbridge	A bridge supporting a track and passing over waterways, roadways, pathways and flood plains etc.
V	
Viaduct	An underbridge consisting of multiple spans with total length over 100 metres.
W	
Walkway	An area along an underbridge where personnel can walk without falling through to the ground
Waterway	Clear area under a bridge for water to run through.
Wing	Piles and sheeting or concrete or masonry wall restraining embankment on each side of an abutment.
X, Y, Z	

Appendix 2 Typical bridge spans and members

The following figures are attached, illustrating a number of different types of bridge structures that exist together with their major components:

Figure 1 - Transom top timber underbridge

Figure 2 - Ballast top timber underbridge

Figure 3 - Timber truss underbridge

Figure 4 - Transom top underbridge

Figure 5 - Ballast top underbridge

Figure 6 - Concrete box girder

Figure 7 - Masonry arch bridge

Figure 8 – Precast concrete box culvert

Figure 9 - Rolled Steel joist (RSJ) span

Figure 10 - Broad flange beam (BFB) span

Figure 11 Plate web girder (PWG) welded deck span

Figure 12 - Plate web girder (PWG) rivetted deck span

Figure 13 - Plate Web Girder (PWG) rivetted through span

Figure 14 - Truss girder through span

Figure 15 - Steel overbridge jack arch span

Figure 16 - Footbridge and stepway

Figure 17 - Rolled steel sections

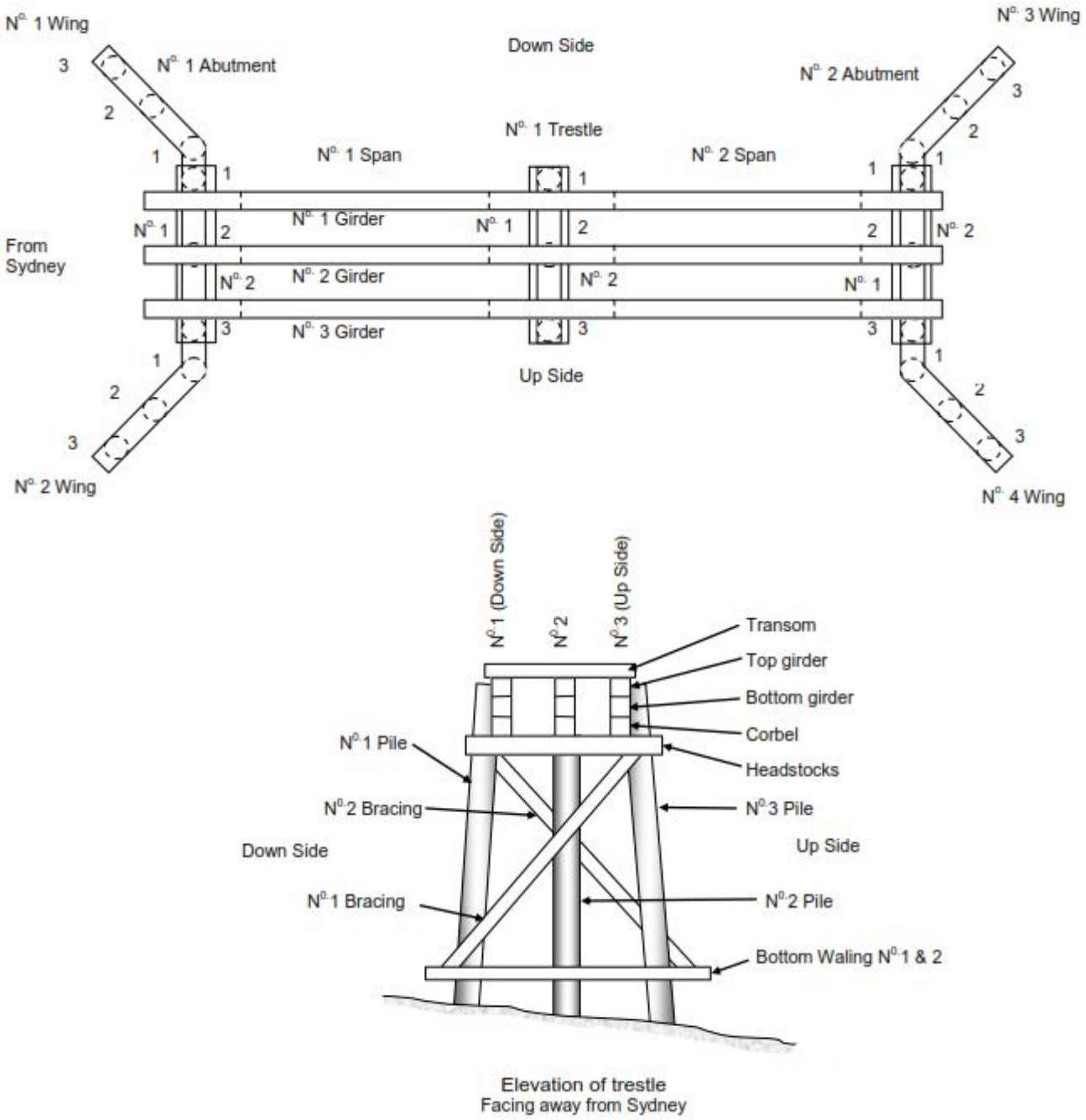

Figure 1 - Transom top timber underbridge

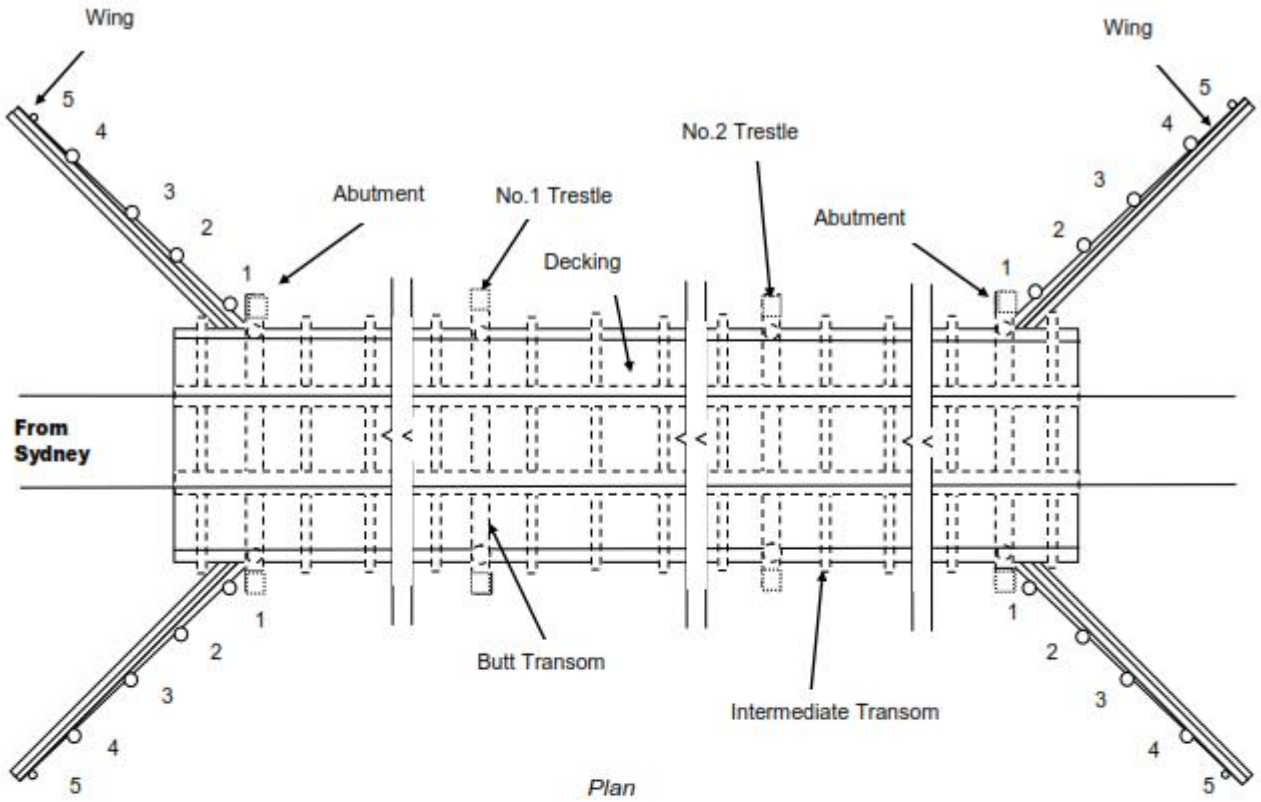

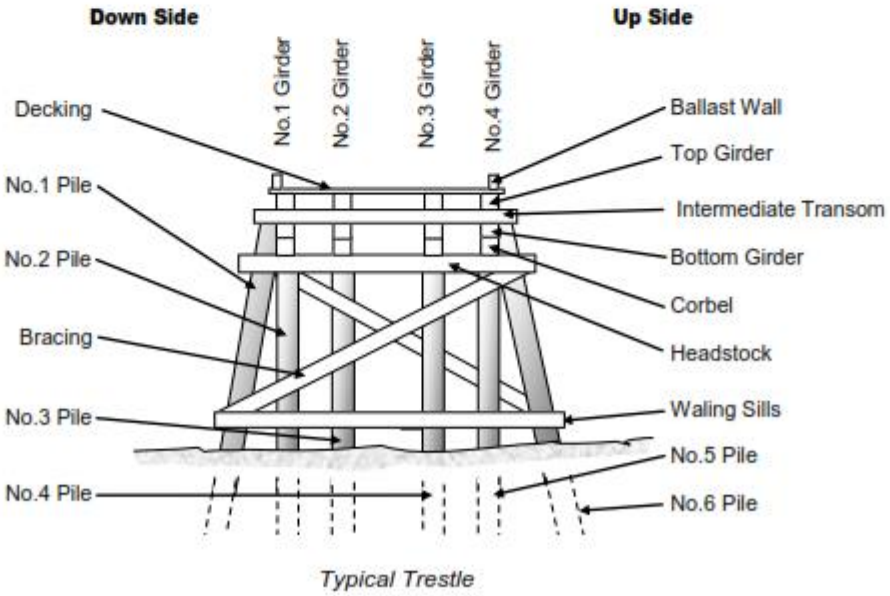

Figure 2 - Ballast top timber underbridge

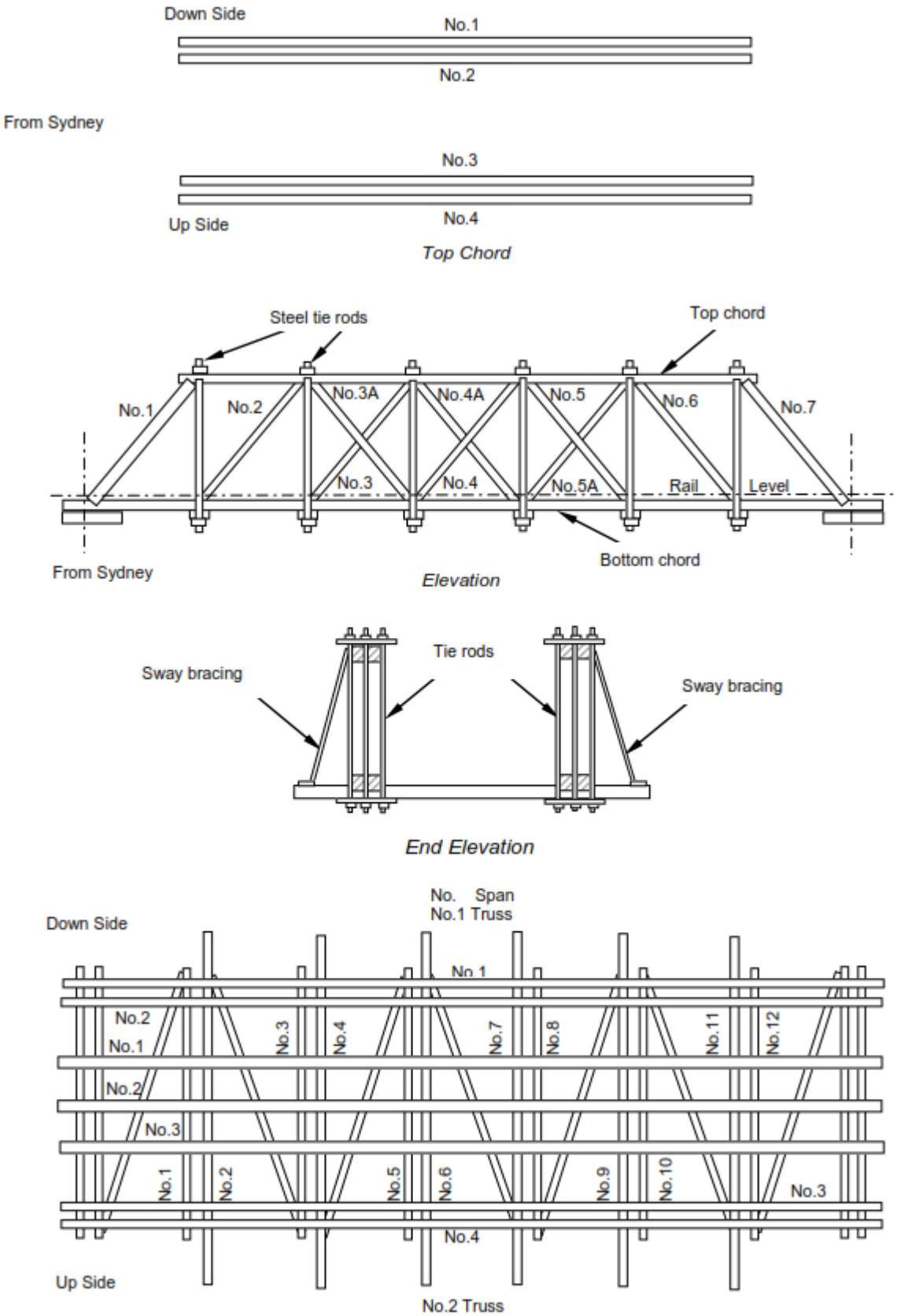

Figure 3 - Timber truss underbridge

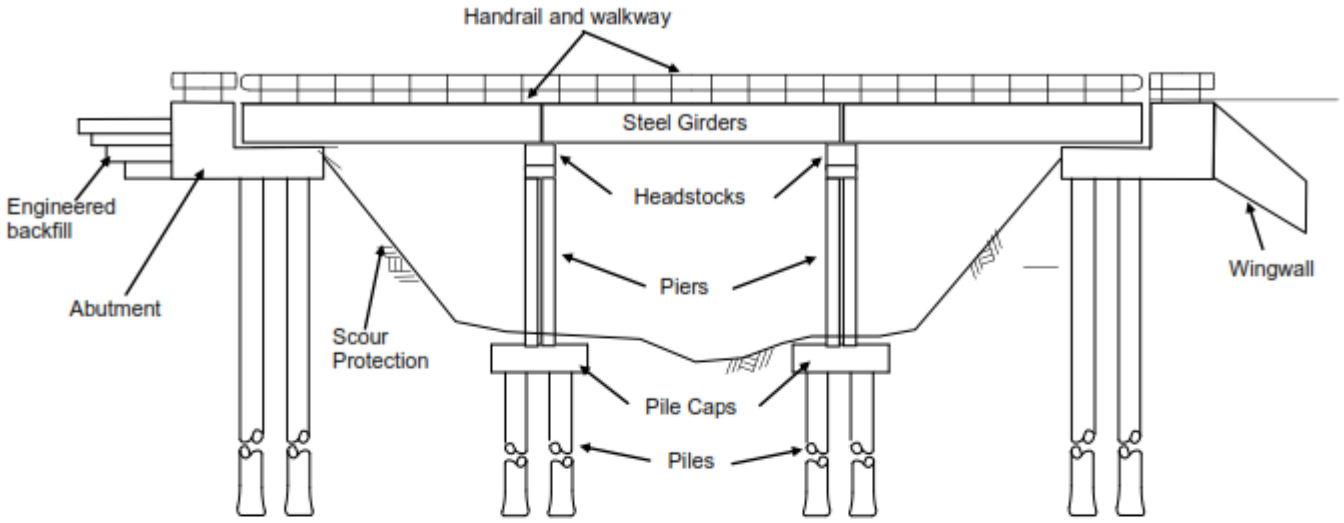

Elevation

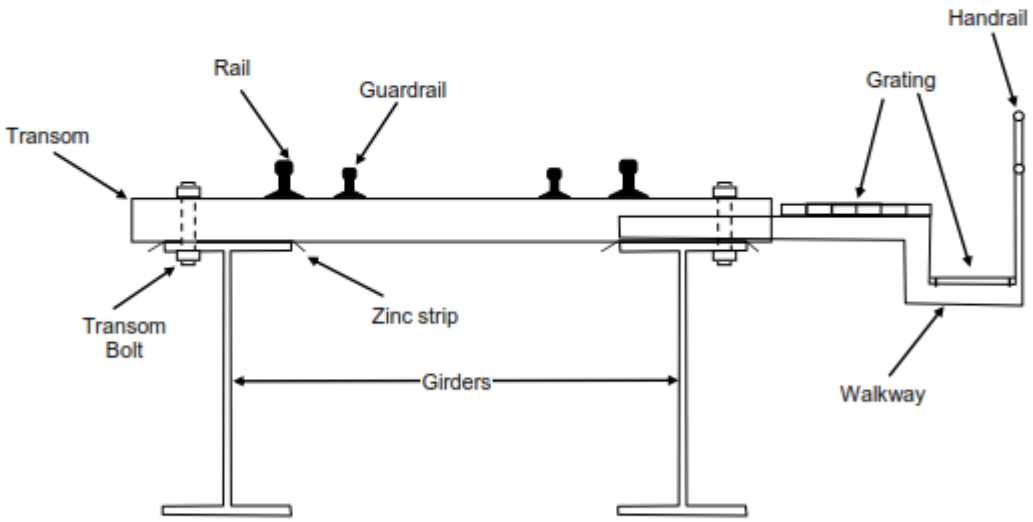

Single track – Deck Cross Section

Figure 4 - Transom top underbridge

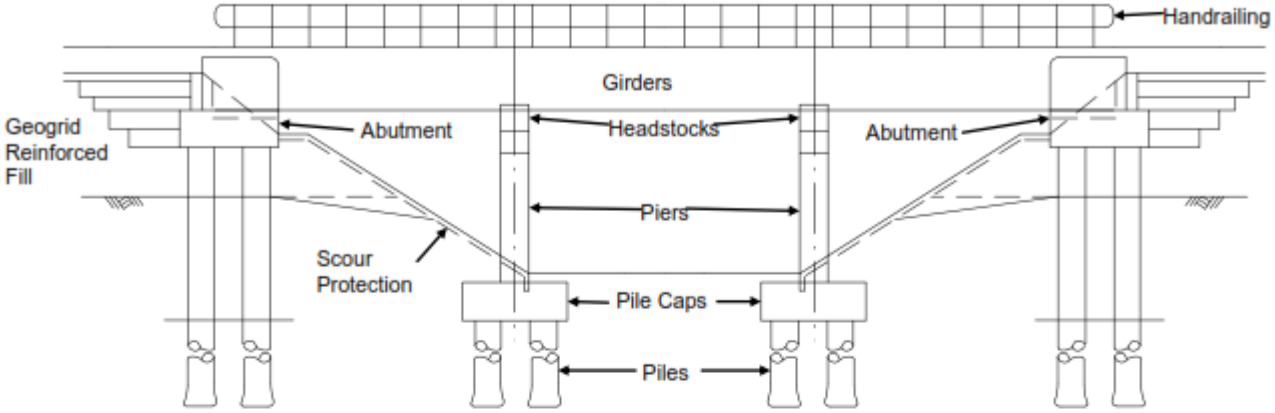

Elevation

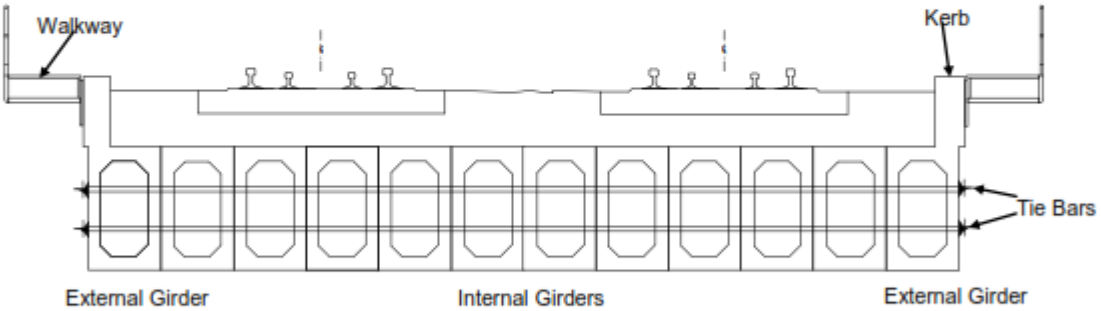

Multiple Track - Deck Cross Section

Figure 5 - Ballast top underbridge

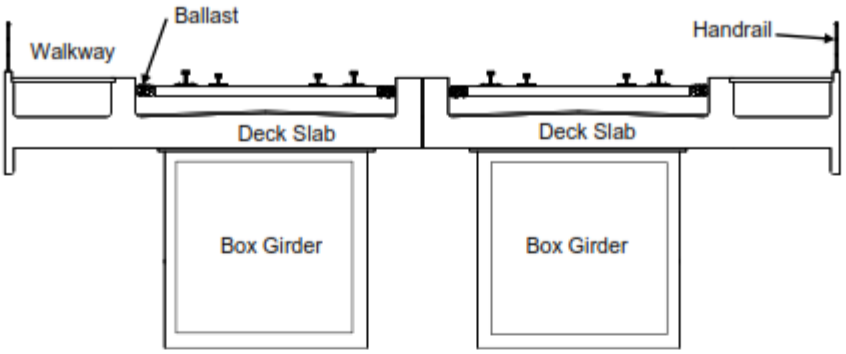

Figure 6 - Concrete box girder

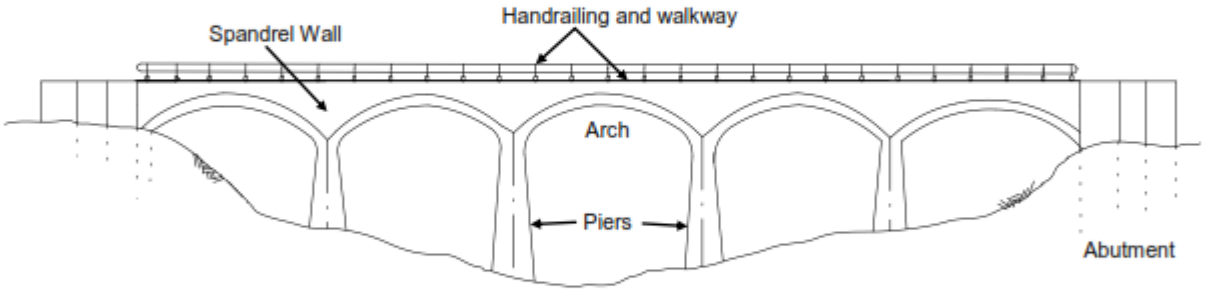

Figure 7 - Masonry arch bridge

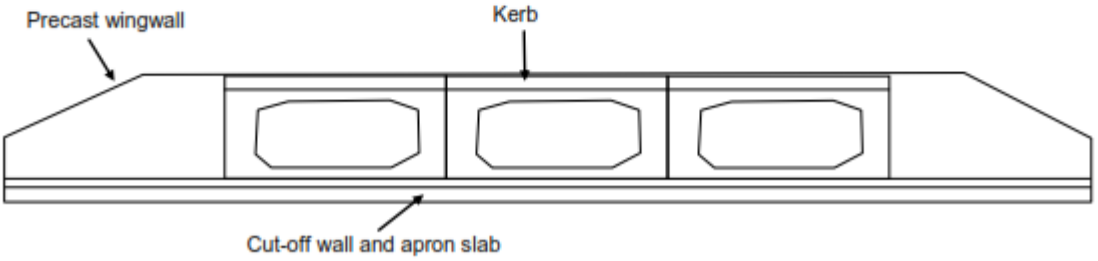

Figure 8 – Precast concrete box culvert

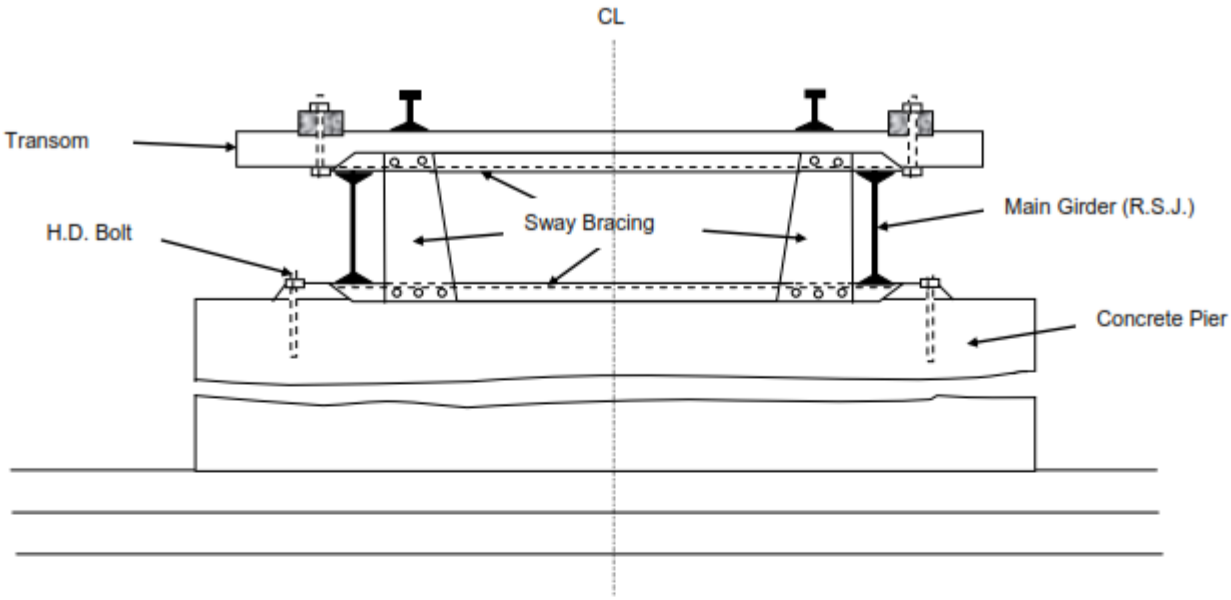

Figure 9 - Rolled Steel joist (RSJ) span

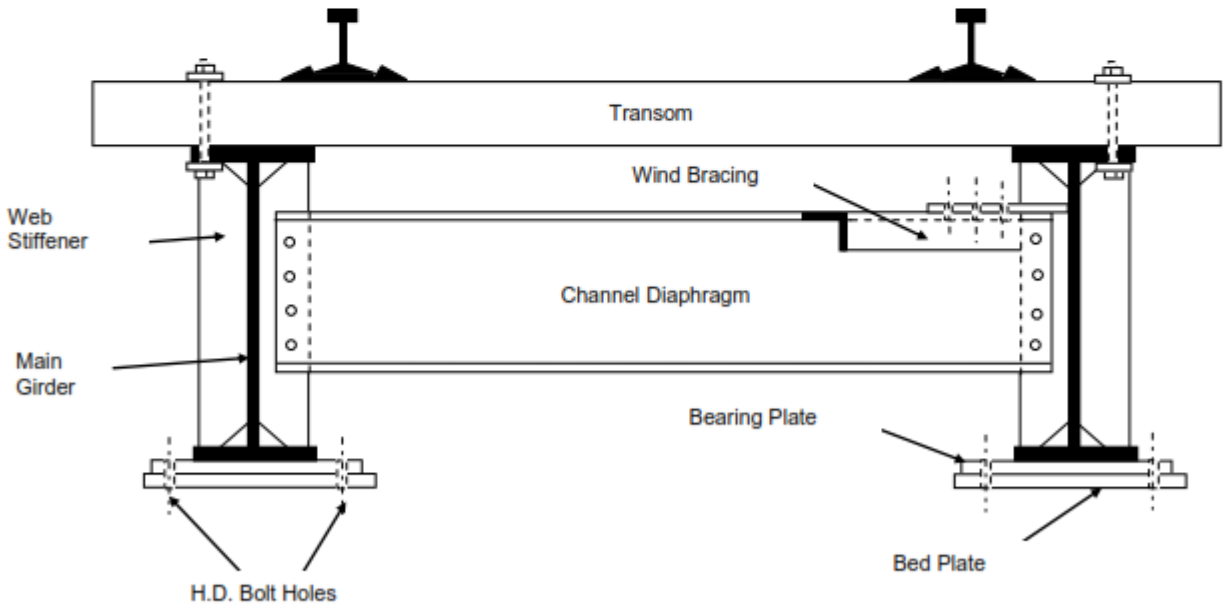

Figure 10 - Broad flange beam (BFB) span

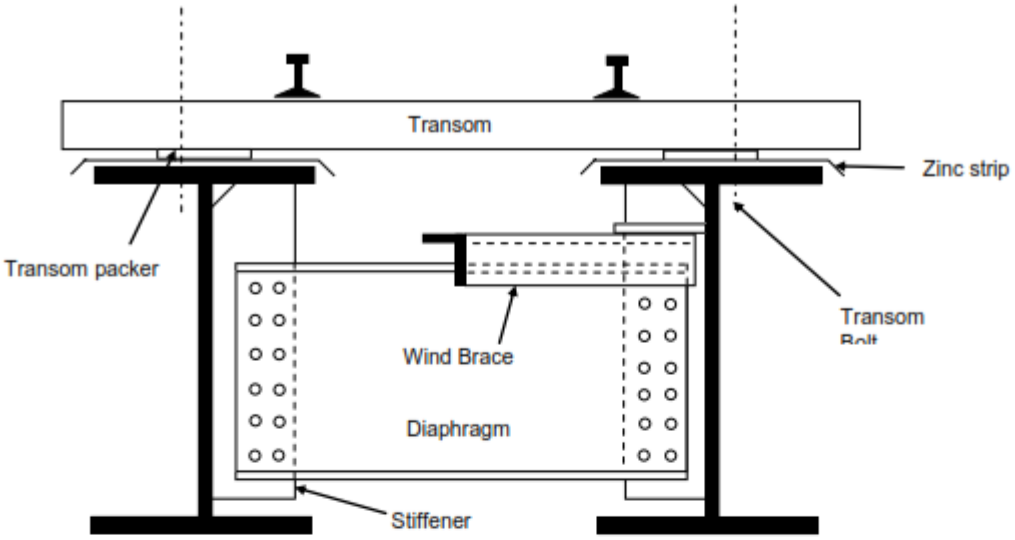

Typical Section

Original Design

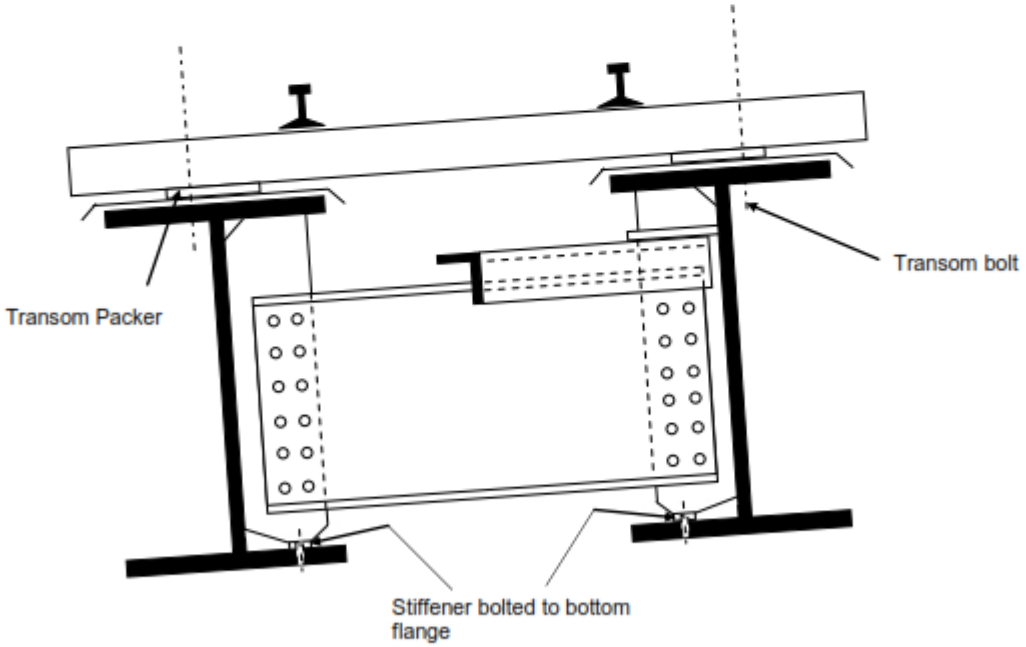

Typical Section

Modified Design

Figure 11 Plate web girder (PWG) welded deck span

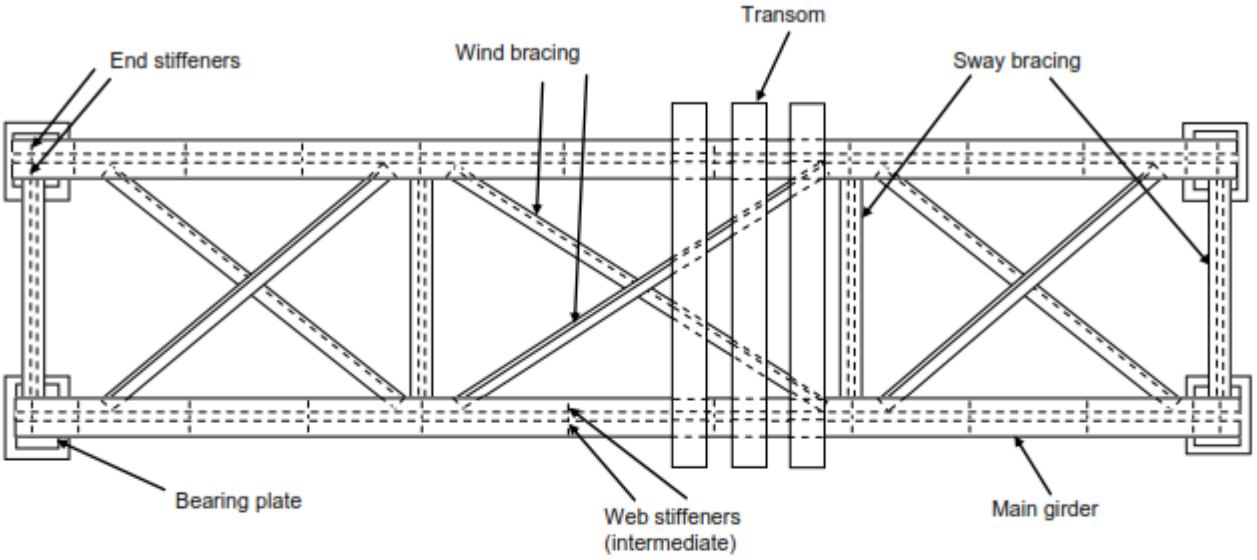

Plan

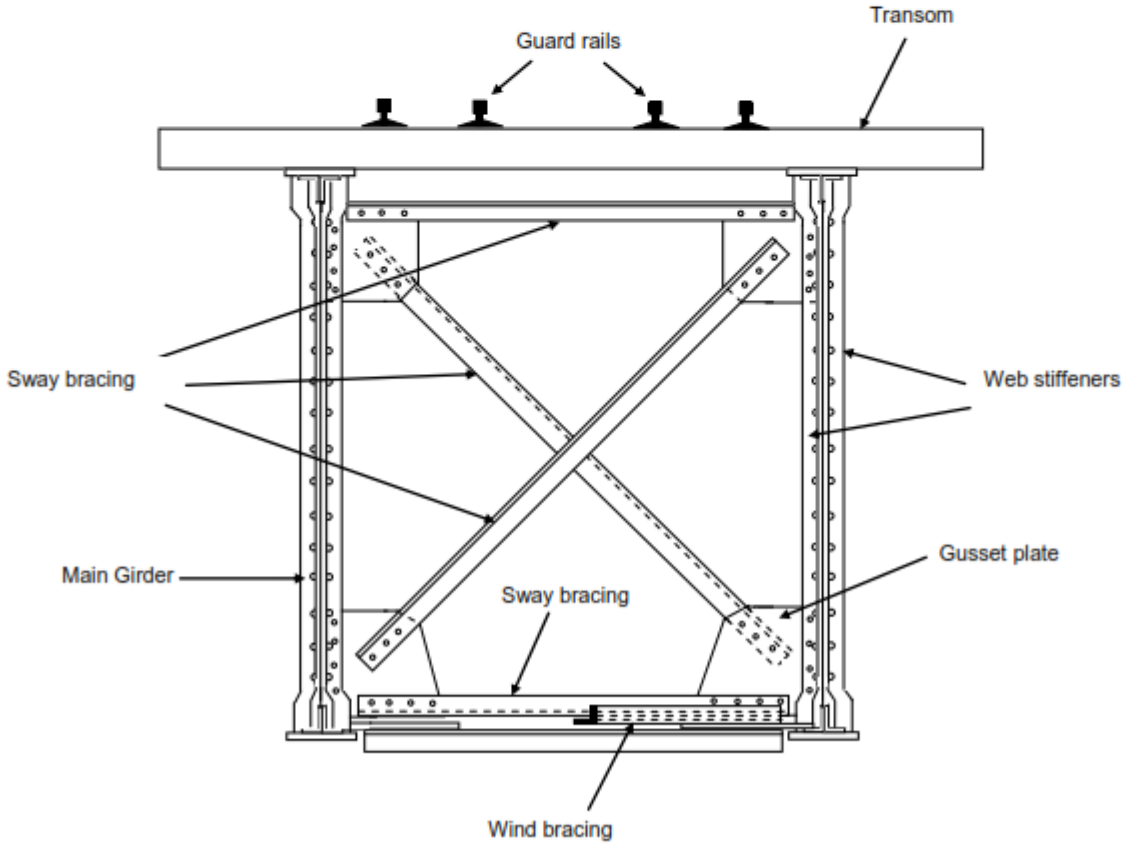

Typical Section

Figure 12 - Plate web girder (PWG) rivetted deck span

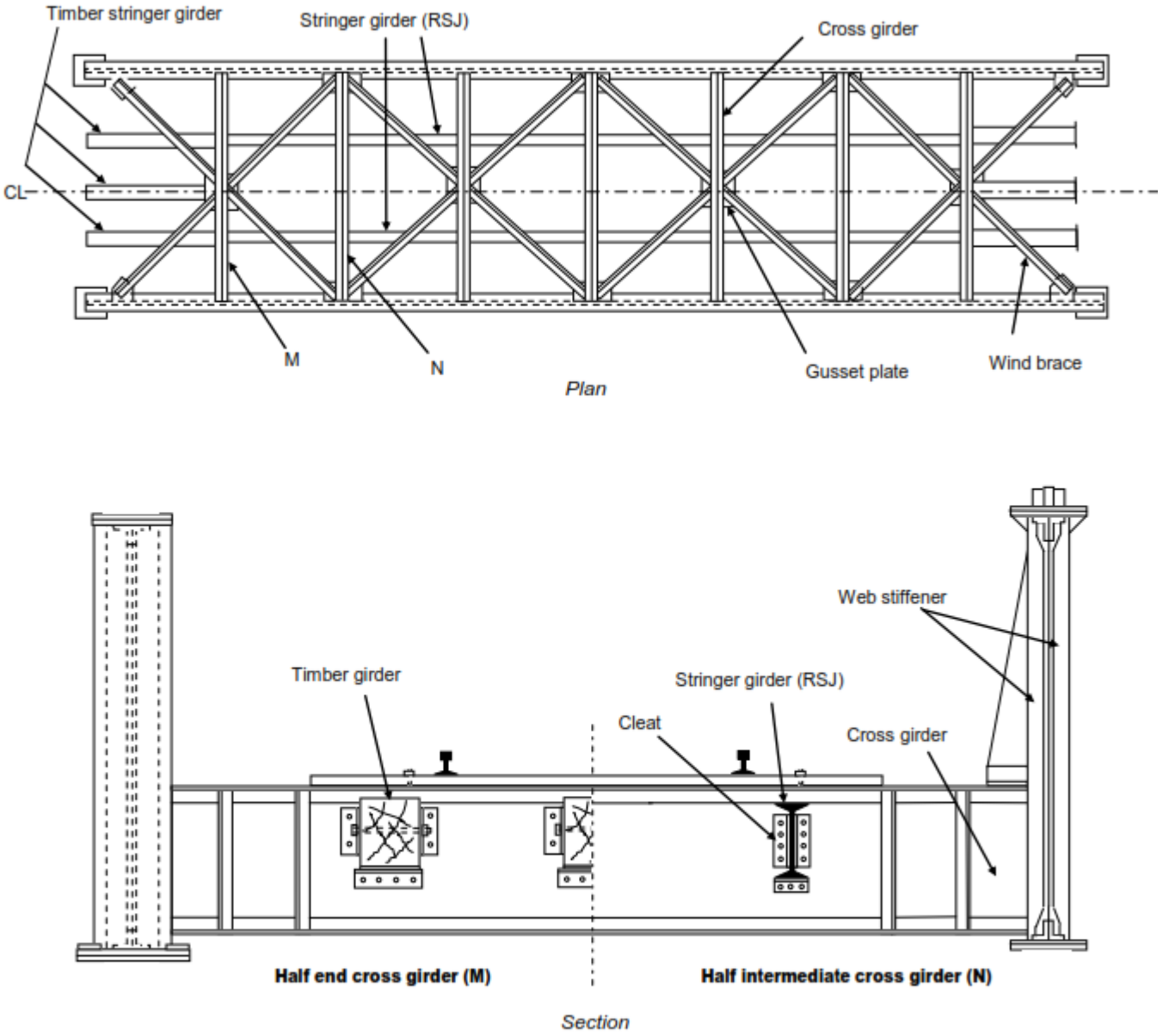

Figure 13 - Plate Web Girder (PWG) rivetted through span

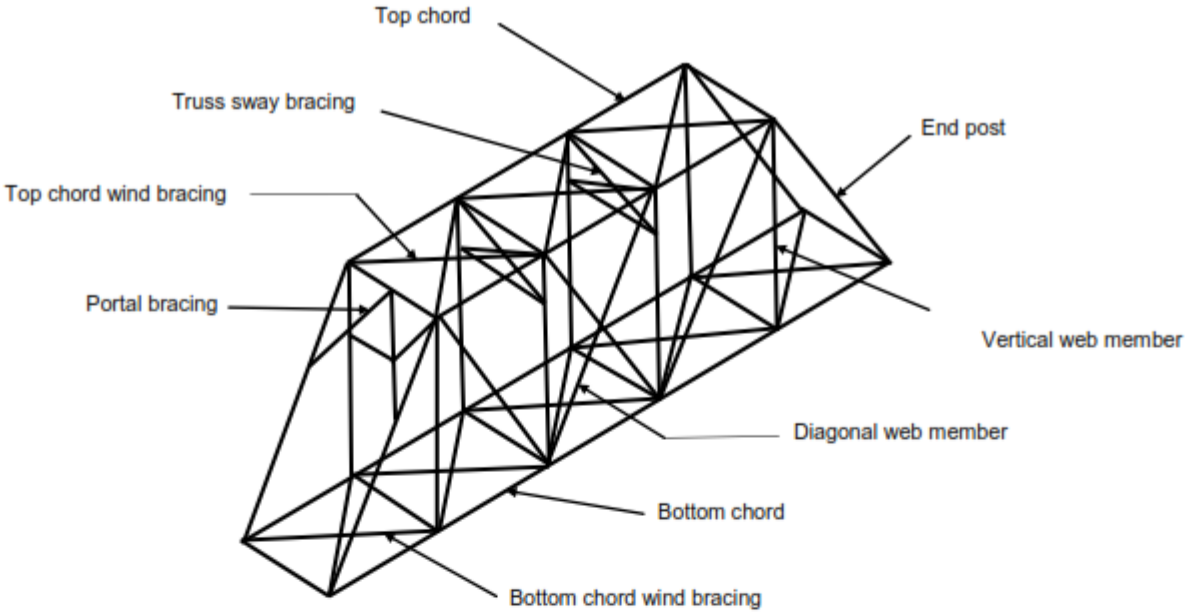

(stringers and their bracing not shown)

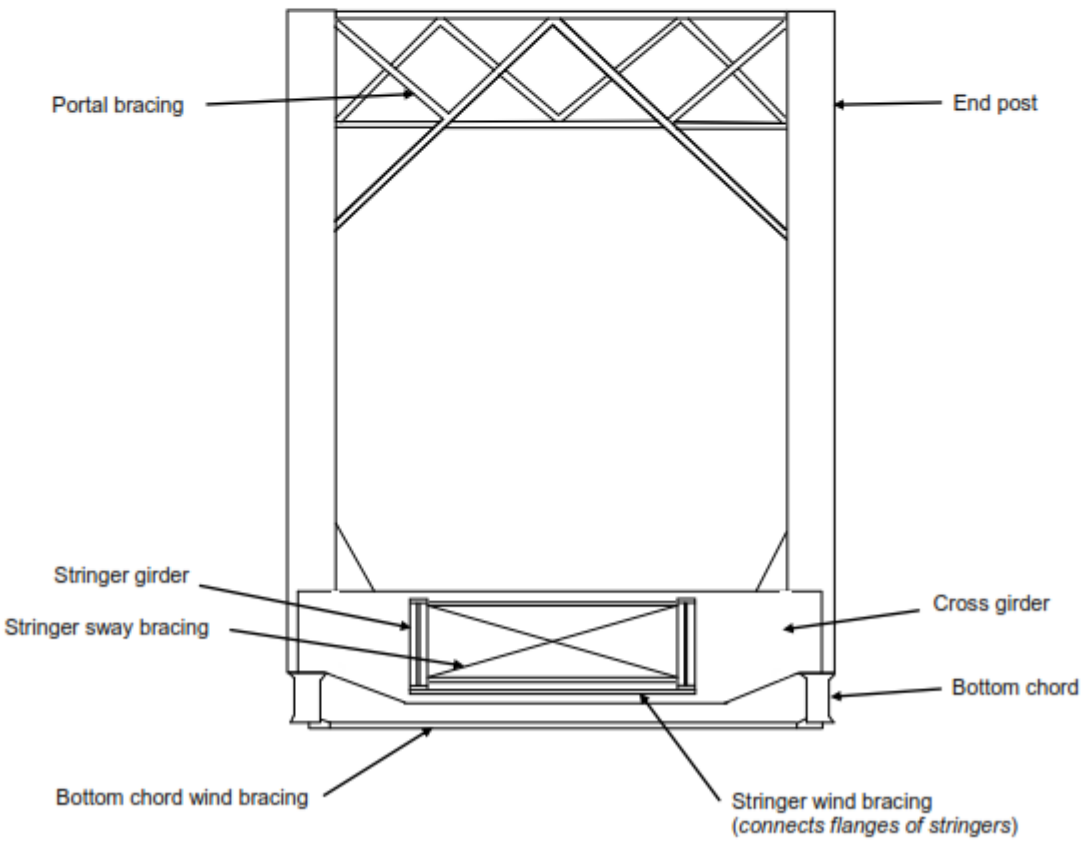

End View

Figure 14 - Truss girder through span

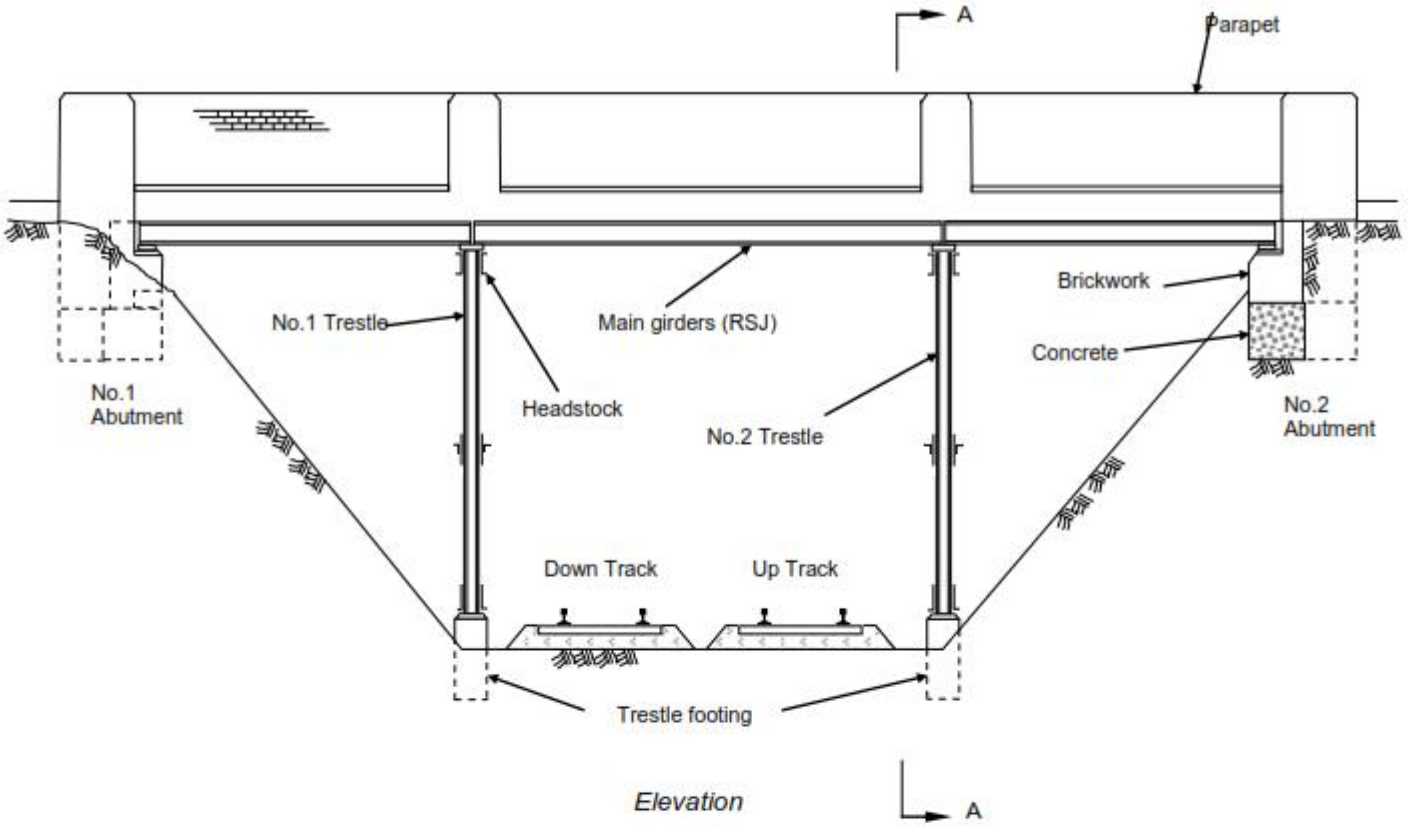

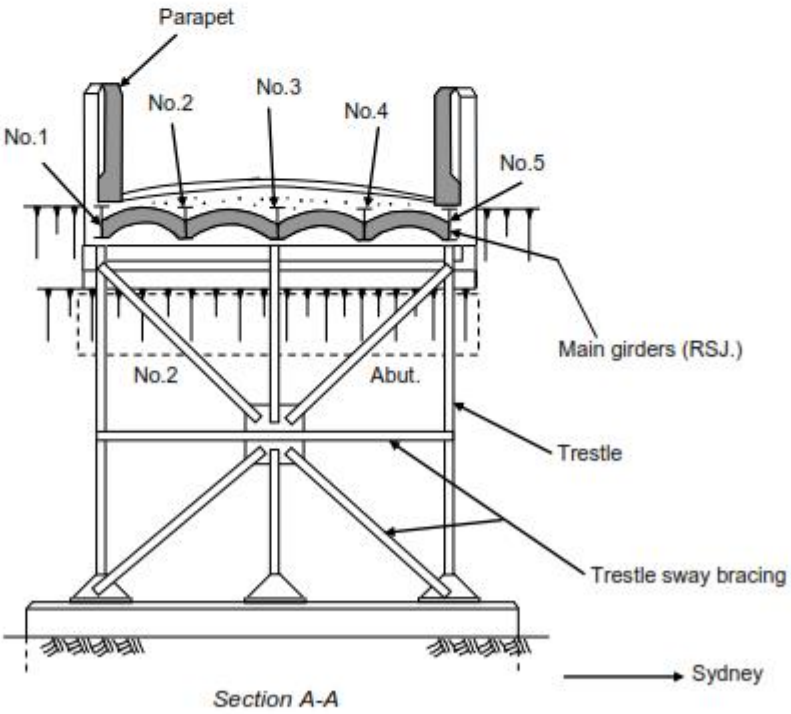

Figure 15 - Steel overbridge jack arch span

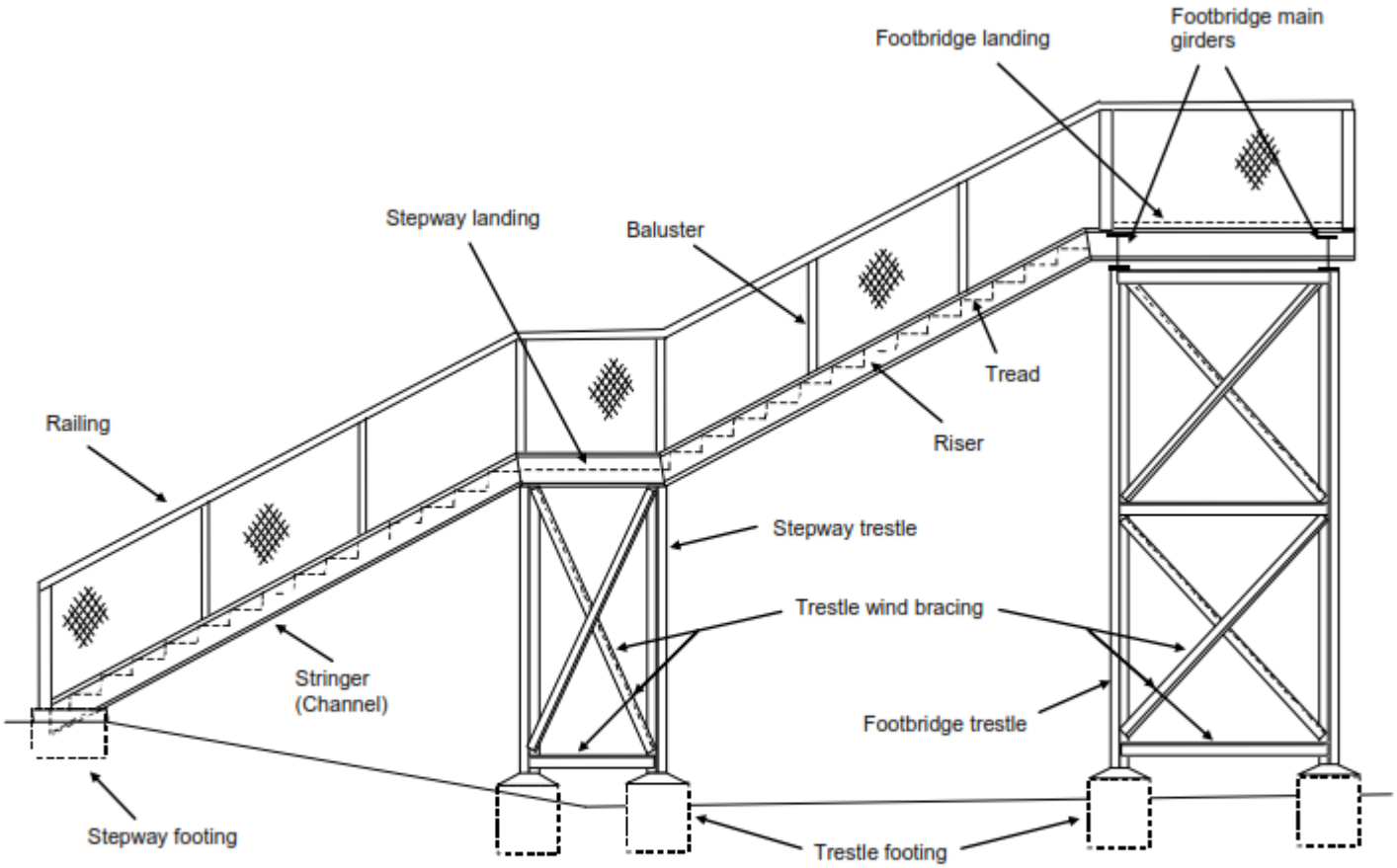

Figure 16 - Footbridge and stepway

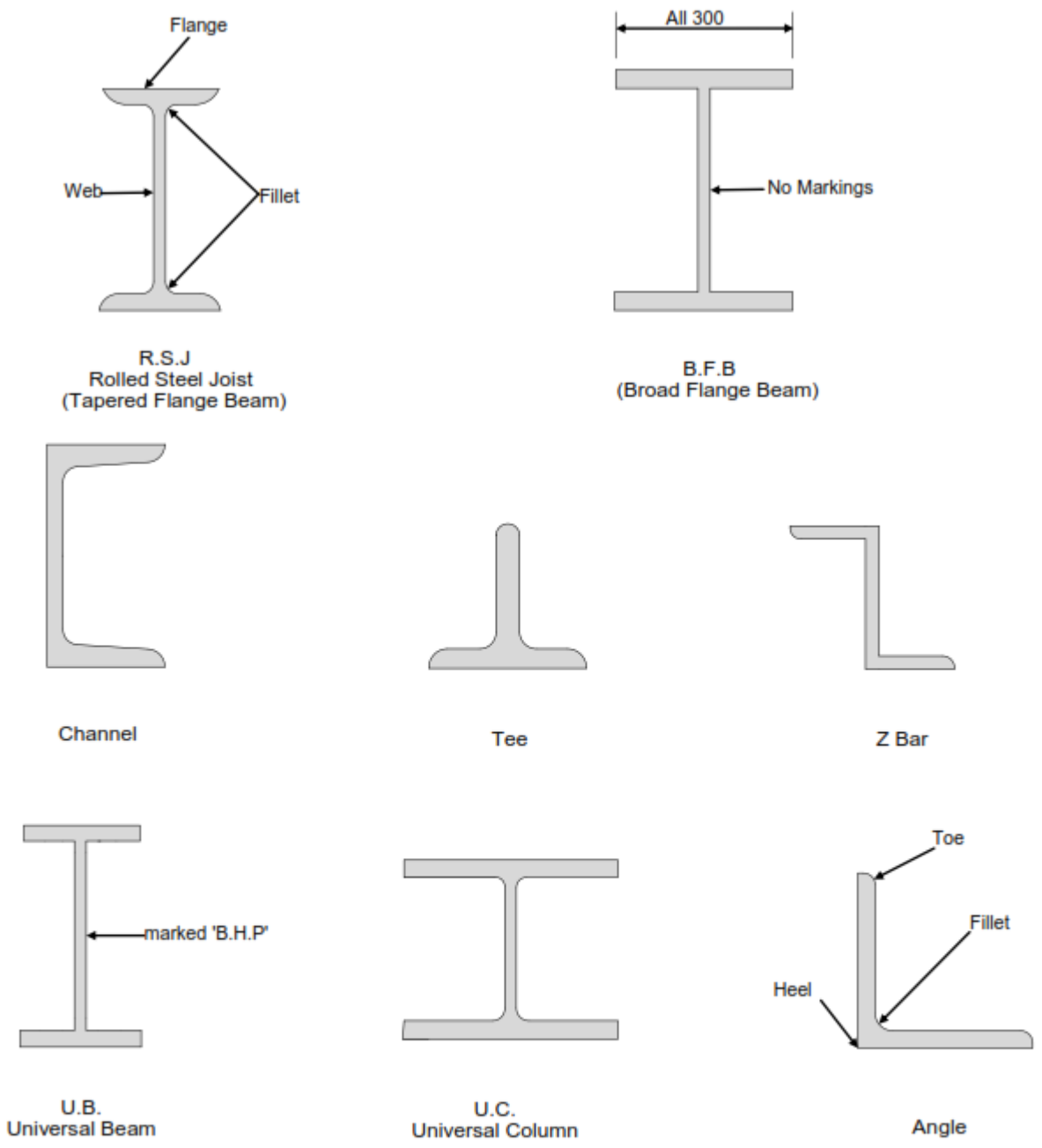

Figure 17 - Rolled steel sections